Fachgebiet Prozessoptimierung

TECHNISCHE UNIVERSITÄT ILMENAU

Fakultät für Informatik und Automatisierung
Institut für Automatisierungs- und Systemtechnik

Systems Optimization

Winter Semester 2019

Exercise II

Prof. Dr.-Ing. habil. Pu Li
M.Sc. Xujiang Huang
Technische Universität Ilmenau
Department of Process Optimization (Prop)

1. Solve the Problem I.2 graphically!

2. Sovle the following linear optimization problem using simplex method

$$\begin{aligned} &\min_x \{f(x) = 3x_1 + 4x_2 + 5x_3\}, \quad x \in \mathbb{R}^n, \quad n = 3 \\ &x_1 + x_3 \leq 2 \\ &x + 1 + x_2 \leq 5, \quad x_i \geq 0, i = 1, 2, 3 \end{aligned} \tag{1}$$

3. (Task planning) For the production of two end products E_1 and E_2, three machines are required. Per unit of quantity of the products E_1 and E_2 are on the machine F_1 or F_2 or F_3 the in following processing times a_{ij} in hours required

	F_1	F_2	F_3
E_1	1	2	3
E_2	4	3	1

To produce the products, the working hours available for each machine type are denoted as b_i as follows:

$$b_1 = 36, b_2 = 32, b_3 = 34$$

For each type of the products, the profit is denoted as c_j in Euro

$$c_1 = 12, \quad c_2 = 30$$

We are looking for the quantities to be produced per week x_1, x_2 (units of measure) of the Products E_1, E_2, so while not exceeding the available machine times. The objective is to enlarge the total profit G per week is as large as possible.

Formulate the optimization problem and implement it in solution GAMS!

4. (Mixed integer optimization problem) Given is the production process outlined below. From a raw material (raw material costs: 5000 e per unit), two intermediate products are produced in a first production stage, which in a second production stage is processed into a final product which is to be made available to the market in 10 units. The optimal configuration of the process is to be calculated taking into account the investment costs (once), the operating costs (per unit) and the production rate.

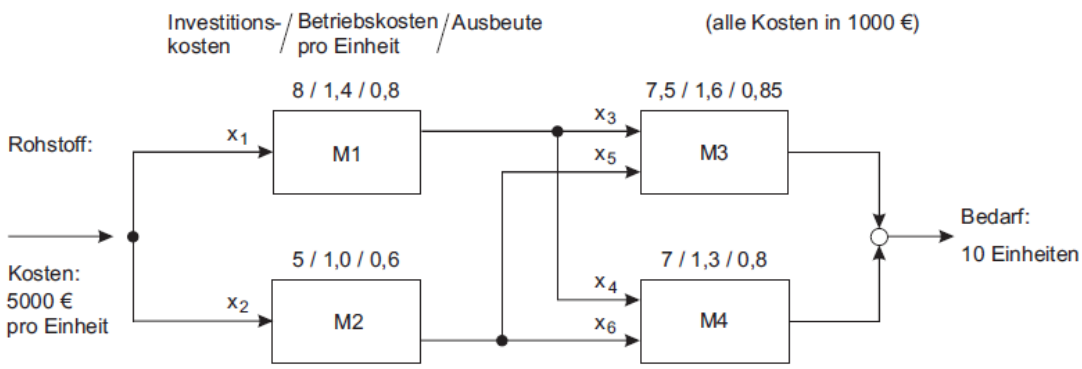

Figure 1: Production system

Formulate an optimization problem from the point of view of cost minimization and implement it for

$$x_{max}^{\top} = \begin{bmatrix} x_{1,max} & 10 & x_{3,max} & 10 & 10 & 10 \end{bmatrix}$$

(a) $x_{1,max} = 20, x_{3,max} = 20$

(b) $x_{1,max} = 20, x_{3,max} = 10$

(c) $x_{1,max} = 10, x_{3,max} = 10$